FRONT SUSPENSION

CONTENTS

GENERAL INFORMATION 2
SERVICE SPECIFICATIONS 3
SPECIAL TOOLS 3
ON-VEHICLE SERVICE 4
Wheel Alignment Check and Adjustment 4
Ball Joint Dust Cover Check 6
STRUT ASSEMBLY 7
STRUT BAR AND LOWER ARM 10
STABILIZER BAR 13
CROSSMEMBER 15

GENERAL INFORMATION

The front suspension is a McPherson strut with coil spring. The shock absorber is gas-filled hydraulic double-acting type.

COIL SPRING

<3-door models>

Items	General Export (except Hong Kong)	Hong Kong	Australia
Wire diameter × average diameter × free length mm	14 × 160 × 347	LH: 14 × 160 × 365 RH: 14 × 160 × 373	LH: 14 × 160 × 356 RH: 14 × 160 × 365

<5-door models>

Items	General Export (except Hong Kong)	Hong Kong	Australia
Wire diameter × average diameter × free length mm	14 × 160 × 365	LH: 14 × 160 × 373 RH: 14 × 160 × 385	LH: 14 × 160 × 365 RH: 14 × 160 × 373

CONSTRUCTION DIAGRAM

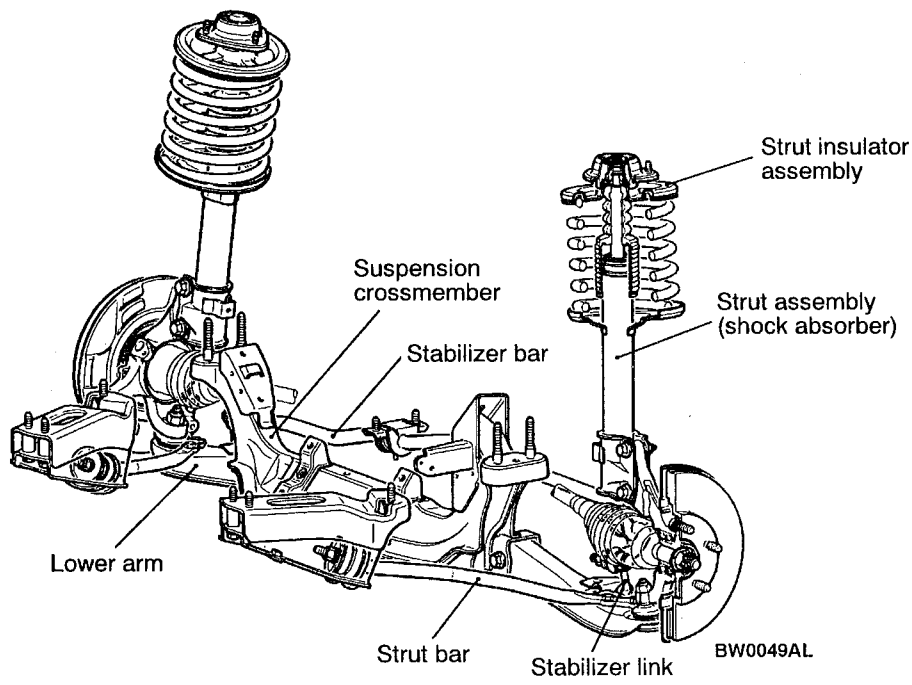

SERVICE SPECIFICATIONS

Items		Standard value
Toe-in	At the centre of tyre tread mm	3 ± 2
	Toe-angle (per wheel)	0°07' ± 05'
Toe-out angle on turns (inner wheel when outer wheel at 20°)		21°04'
Camber		0°30' ± 30'*
Caster		3°00' ± 30'*
Side slip (per 1 m)		0 ± 3
Kingpin inclination		11°04'
Lower arm ball joint rotation starting torque Nm		1.0 – 5.9
Stabilizer link ball joint turning torque Nm		1.7 – 3.1

NOTE
*: difference between right and left wheels: less than 30'

SPECIAL TOOLS

Tools	Number	Name	Use
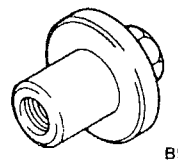 B991004	MB991004	Wheel alignment gauge attachment	Wheel alignment measurement <Vehicles with aluminium wheels>
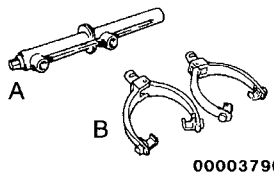 A B 00003796	A: MB991237 B: MB991238	A: Spring compressor body B: Arm set	Coil spring compression
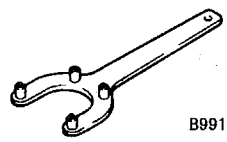 B991176	MB991176	Spring seat holder	Disassembly and assembly of the strut assembly
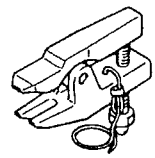 B991113	MB991406 or MB991113	Steering linkage puller	Tie rod end disconnection
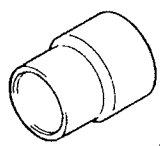 B990799	MB990799	Ball joint remover & installer	Lower arm bushing press-in and press-out

Tools	Number	Name	Use
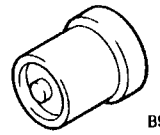 B990996	MB990996	Lower arm bushing arbor	Lower arm bushing press-in and press-out
 B990997	MB990997	Lower arm bushing installer support	
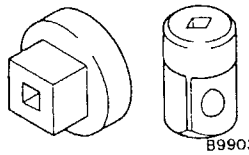 B990326	MB990326	Preload socket	• Lower arm ball joint rotation starting torque measurement • Stabilizer link ball joint rotation torque measurement
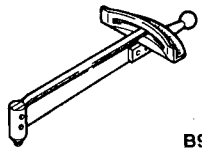 B990968	MB990968	Torque wrench	
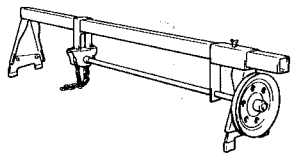	GENERAL SERVICE TOOL MZ203827	Engine lifter	Supporting the engine assembly during removal and installation of the crossmember

ON-VEHICLE SERVICE

WHEEL ALIGNMENT CHECK AND ADJUSTMENT

Measure the wheel alignment with the vehicle parked on a level surface.
The front suspension, steering system, and wheels should be serviced to normal condition prior to measurement of wheel alignment.

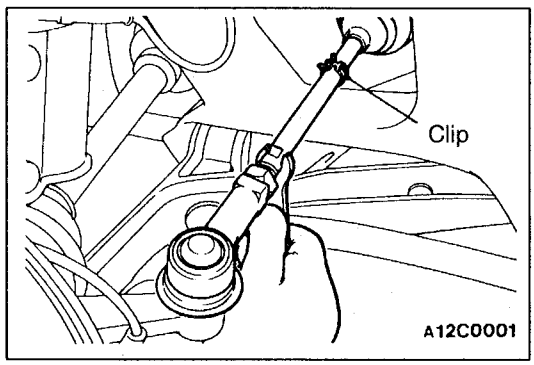

TOE-IN

Standard value:
At the centre of tyre tread 3 ± 2 mm
Toe angle (per wheel) 0°07' ± 05'

1. If the toe-in is not within the standard value, adjust the toe-in by undoing the clip and turning the left and right tie rod turnbuckles by the same amount (in opposite directions).

   NOTE
   The toe will move out as the left turnbuckle is turned toward the front of the vehicle and the right turnbuckle is turned toward the rear of the vehicle.
2. Use a turning radius gauge to check that the steering angle is at the standard value.
   (Refer to GROUP37A – On-vehicle Service.)

TOE-OUT ANGLE ON TURNS

To check the steering linkage, especially after the vehicle has been involved in an accident or if an accident is presumed, it is advisable to check the toe-out angle on turns in addition to the wheel alignment.
Conduct this test on the left turn as well as on the right turn.

Standard value (inner wheel when outer wheel at 20°): 21°04'

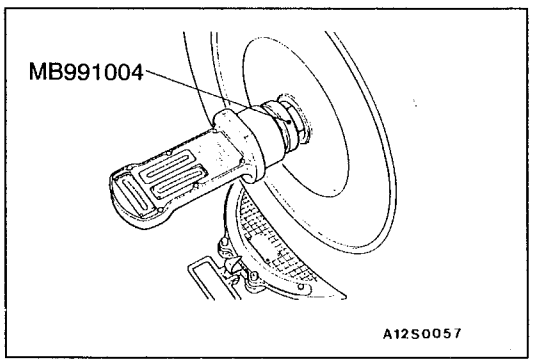

CAMBER, CASTER AND KINGPIN INCLINATION

Standard value:

Item	Specification
Camber (difference between right and left wheel: less than 30')	0°30' ± 30'
Caster (difference between right and left wheel: less than 30')	3°00' ± 30'
Kingpin inclination	11°04'

NOTE
1. Camber and caster are preset at the factory and cannot be adjusted.
2. If camber is not within the standard value, check and replace bent or damaged parts.
3. For vehicles with aluminium type wheels, attach the camber/caster/kingpin gauge to the drive shaft by using the special tool. Tighten the special tool to the same torque 226 Nm as the drive shaft nut.

Caution
To prevent the wheel bearing from damage, never subject the wheel bearings to the vehicle load when the drive shaft nuts are loosened.

SIDE SLIP

Measure the side slip with a side slip tester.

Standard value: 0 ± 3 mm

BALL JOINT DUST COVER CHECK

1. Check the dust cover for cracks or damage by pushing it with finger.
2. If the dust cover is cracked or damaged, replace the lower arm assembly or stabilizer link.

   NOTE
   Cracks or damage of the dust cover may cause damage of the ball joint.

STRUT ASSEMBLY

REMOVAL AND INSTALLATION

Pre-removal Operation
Injector Driver Removal <right side>
<Vehicles for Hong Kong>
(Refer to GROUP 13A.)

Post-installation Operation
- Injector Driver Installation <right side>
  <Vehicles for Hong Kong>
  (Refer to GROUP 13A.)
- Check the Dust Cover for Cracks or Damage by Pushing it with Fingers.
- Wheel Alignment Check and Adjustment
  (Refer to P.33A-4.)

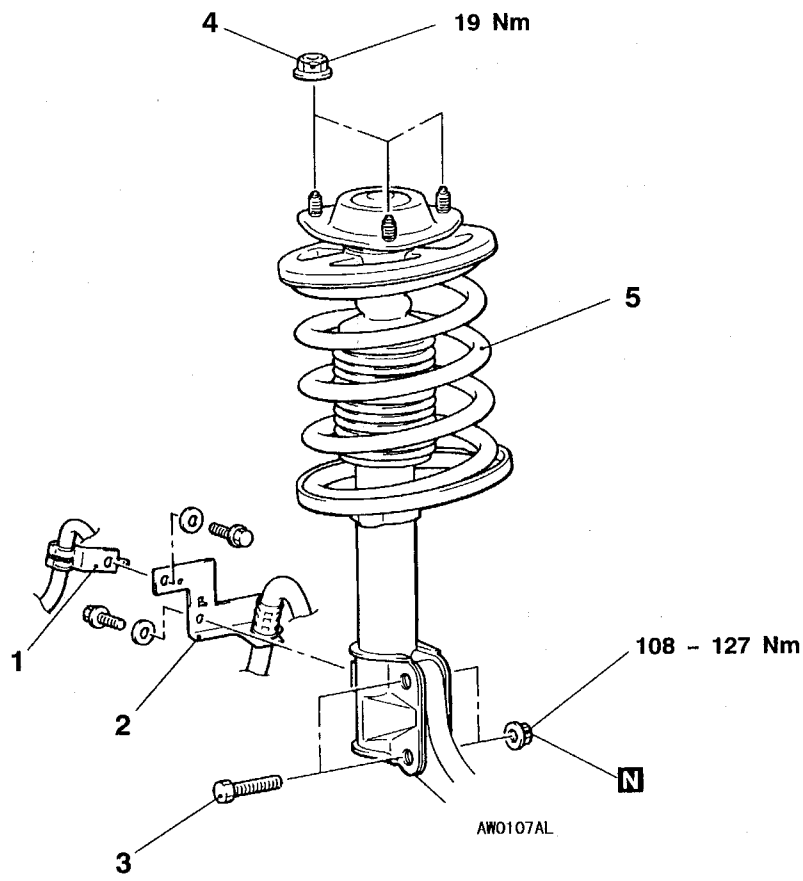

Removal steps
1. Front wheel speed sensor harness bracket <Vehicles with ABS>
2. Brake hose bracket
3. Knuckle connection
4. Strut installation nut
5. Strut assembly

DISASSEMBLY AND REASSEMBLY

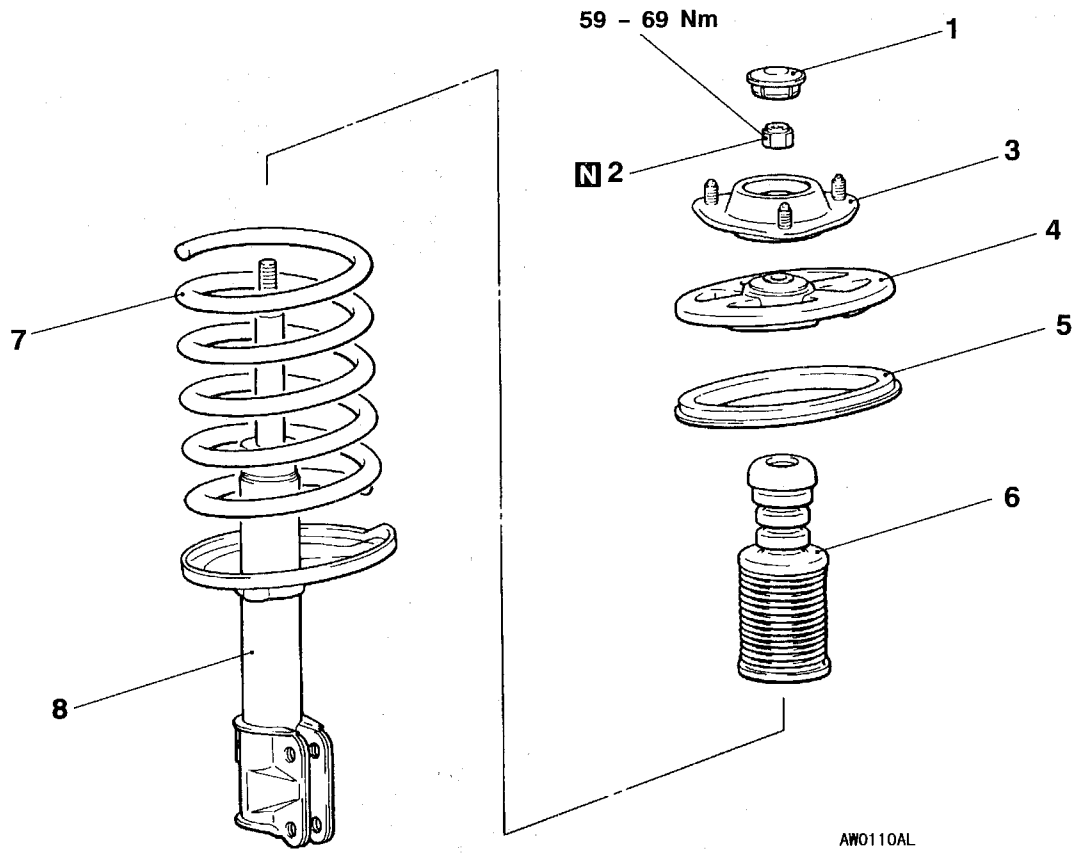

Disassembly steps

1. Dust cover
◀A▶ ▶A◀ 2. Self-locking nut
3. Strut insulator assembly
4. Upper spring seat assembly
5. Upper spring pad
6. Bump rubber
◀B▶ 7. Coil spring
8. Strut assembly

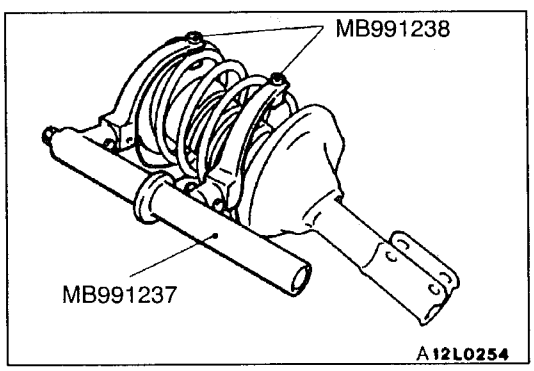

DISASSEMBLY SERVICE POINT

◀A▶ SELF-LOCKING NUT REMOVAL

1. Use the special tools to compress the coil spring.

Caution
Install the special tools evenly, and so that the maximum length will be attained within the installation range.

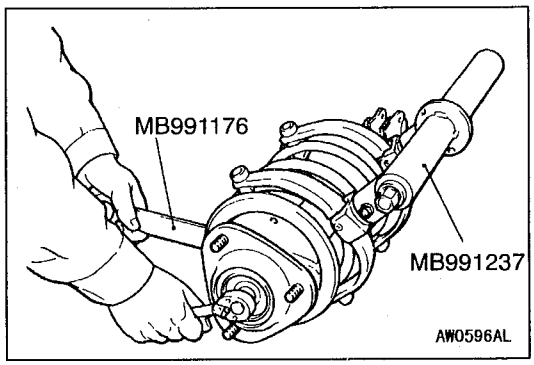

2. Holding the upper spring seat with the special tool, loosen the self-locking nut.

Caution
Do not use an impact wrench as it will cause the bolt of the special tool to be seized.

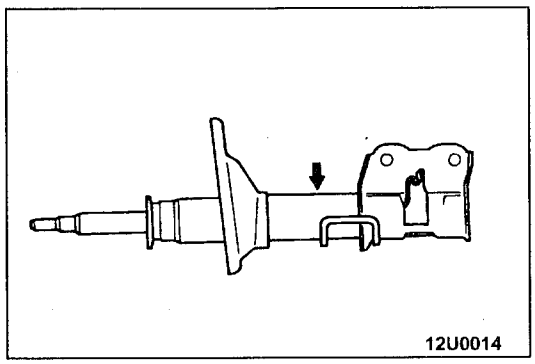

◀B▶ STRUT ASSEMBLY REMOVAL

To discard the strut assembly, place the assembly horizontally with its piston rod extended. Then drill a hole approx. 3 mm in diameter at the location shown in the illustration and discharge the gas.

Caution
The gas itself is harmless but it may issue out of the hole together with chips generated by the drill. Therefore, be sure to wear goggles.

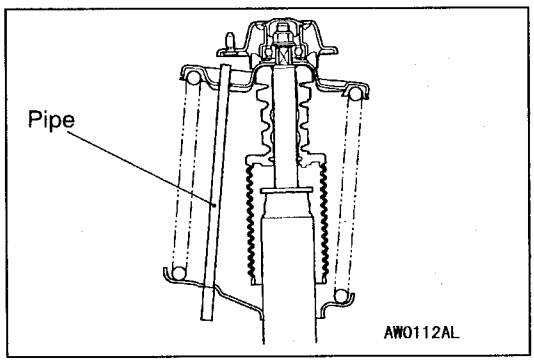

REASSEMBLY SERVICE POINT

▶A◀ SELF-LOCKING NUT INSTALLATION

1. While the coil spring is being compressed by the special tools, provisionally tighten the self-locking nut.
2. Line up the hole in the strut assembly lower spring seat with the hole in the upper spring seat.

   NOTE
   Using a pipe as shown facilitates the alignment.

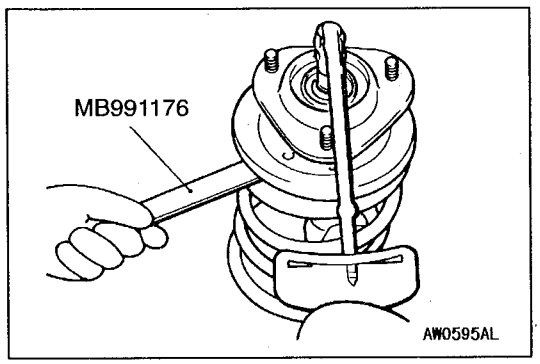

3. Correctly align both ends of the coil spring with the grooves in the spring seat, and then loosen the special tools.
4. Using the special tool, tighten the self-locking nut to the specified torque.

   Specified torque: 59 – 69 Nm

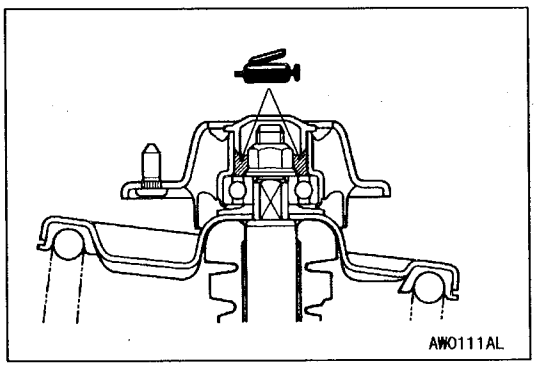

5. Apply multipurpose grease to the bearing of the strut insulator.

Caution
When applying the grease, take care that grease does not adhere to the insulator's rubber.

STRUT BAR AND LOWER ARM

REMOVAL AND INSTALLATION

Caution

***: To prevent bushings from breakage, the parts indicated by * should be temporarily tightened, and then fully tightened with the vehicle on the ground in the unladen condition.**

Pre-removal Operation
Under Cover Removal

Post-installation Operation
- Check the Dust Cover for Cracks or Damage by Pushing it with Finger.
- Wheel Alignment Check and Adjustment (Refer to GROUP 33A-4.)
- Under Cover Installation

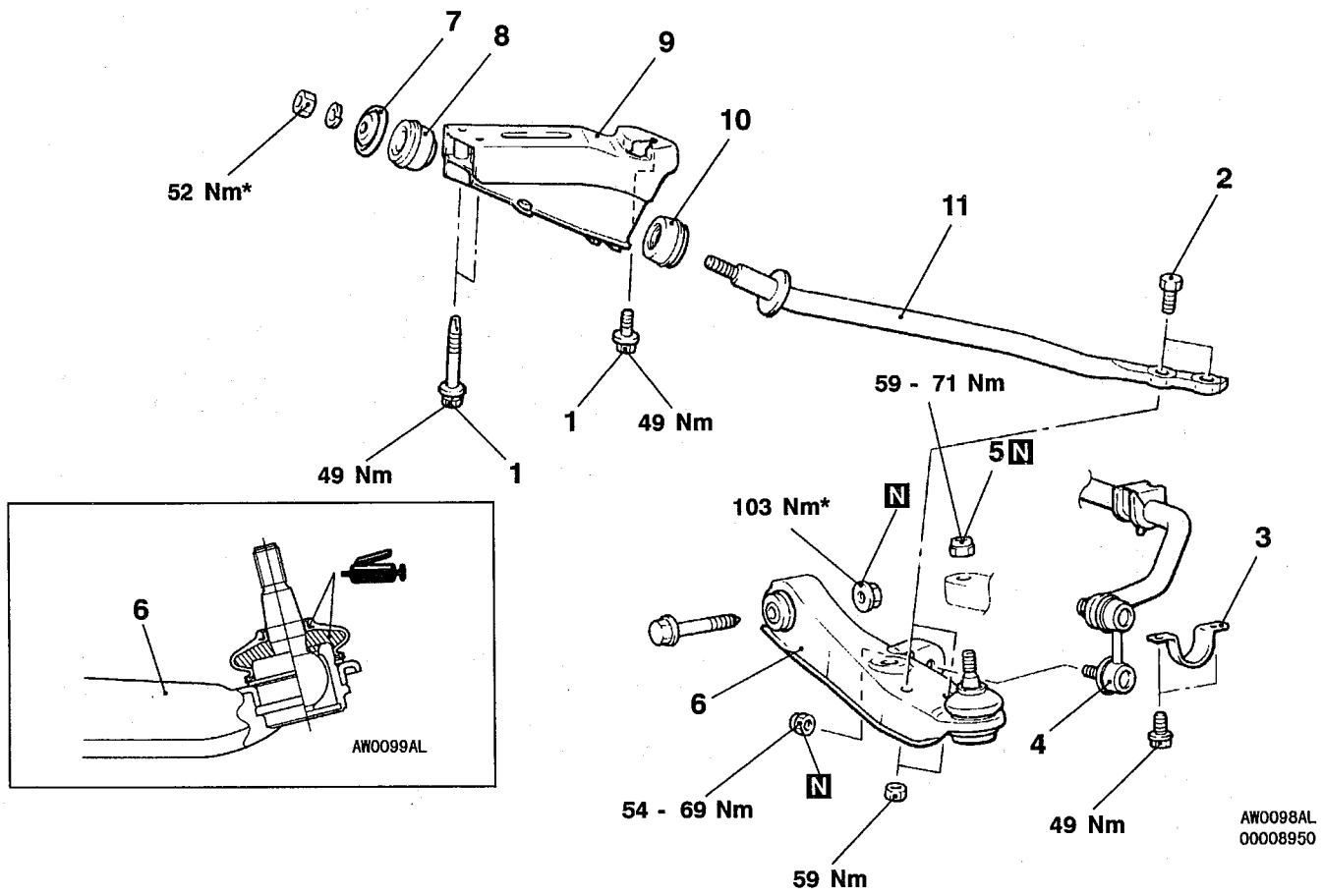

Lower arm removal steps

1. Strut bar bracket installation bolt
2. Strut bar installation bolt
3. Fixture
▶B◀ 4. Stabilizer link connection
◀A▶ 5. Lower arm assembly and knuckle connection
6. Lower arm assembly

Strut bar removal steps

1. Strut bar bracket installation bolt
2. Strut bar installation bolt
7. Washer
▶A◀ 8. Strut bar bushing A
9. Strut bar bracket
▶A◀ 10. Strut bar bushing B
11. Strut bar

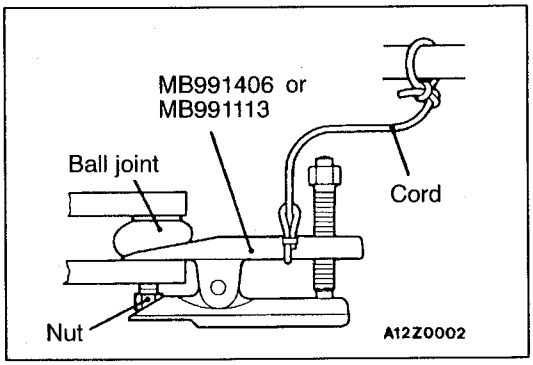

REMOVAL SERVICE POINT

◀A▶ LOWER ARM ASSEMBLY AND KNUCKLE DISCONNECTION

Caution

1. **Loosen the nut but do not remove it.**
2. **Support the special tool with a cord to prevent it from coming off.**

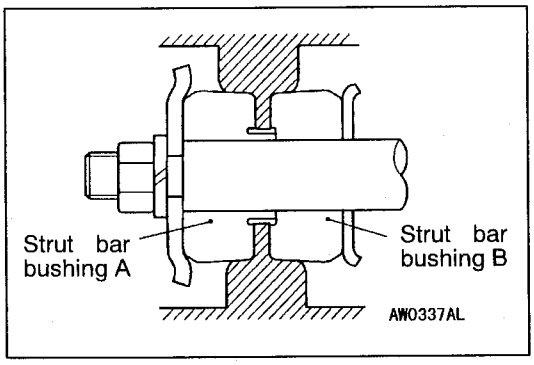

INSTALLATION SERVICE POINTS

▶A◀ STRUT BAR BUSHING B AND STRUT BAR BUSHING A INSTALLATION

Install the bushings A and B as shown in the illustration confirming there shapes.

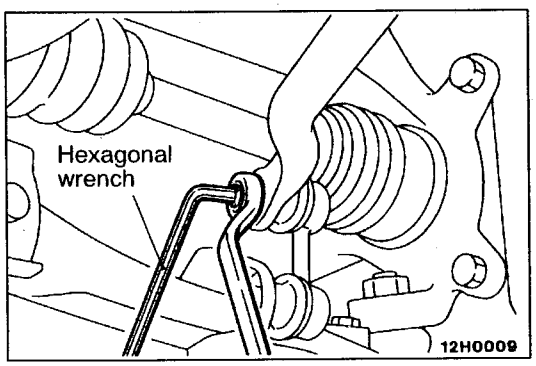

▶B◀ STABILIZER LINK INSTALLATION

Use a hexagonal wrench to hold the stabilizer link stud so that it does not turn, and then tighten the nut.

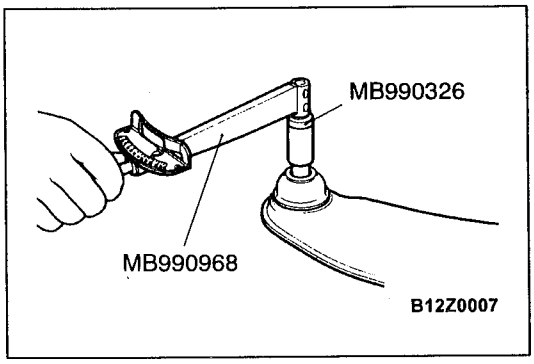

INSPECTION

LOWER ARM BALL JOINT ROTATION STARTING TORQUE CHECK

1. After shaking the ball joint stud several times, install the nut to the stud and use the special tools to measure the rotation starting torque of the ball joint.

   Standard value: 1.0 – 5.9 Nm

2. When the measured value exceeds the standard value, replace the lower arm assembly.
3. When the measured value is lower than the standard value, check that the ball joint turns smoothly without excessive play. If so, it is possible to reuse that ball joint.

LOWER ARM BALL JOINT DUST COVER CHECK

1. Check the dust cover for cracks or damage by pushing it with finger.
2. If the dust cover is cracked or damaged, replace the lower arm assembly.

NOTE
Cracks or damage of the dust cover may cause damage of the ball joint. When it is damaged during service work, replace the dust cover.

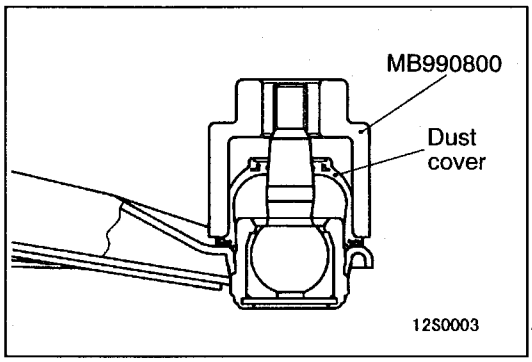

LOWER ARM BALL JOINT DUST COVER REPLACEMENT

Only when the dust cover is damaged accidentally during service work, replace the dust cover as follows:

1. Remove the dust cover.
2. Apply multipurpose grease to the lip and inside of the dust cover.
3. Using the special tool, press the dust cover until it contacts the snap ring.
4. Check the dust cover for cracks or damage by pushing it with finger.

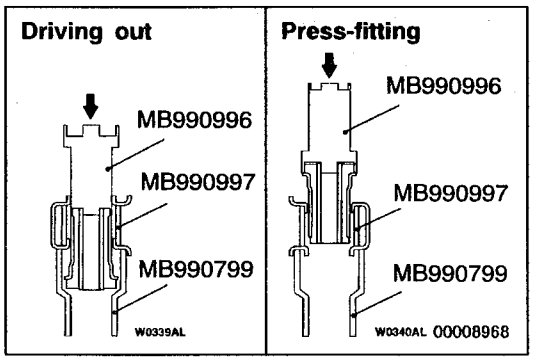

LOWER ARM BUSHING REPLACEMENT

Use the special tools to drive out and press in the bushing.

STABILIZER BAR

REMOVAL AND INSTALLATION

Pre-removal Operation
Under Cover Removal

Post-installation Operation
- Check the Dust Cover for Cracks or Damage by Pushing it with Finger.
- Under Cover Installation

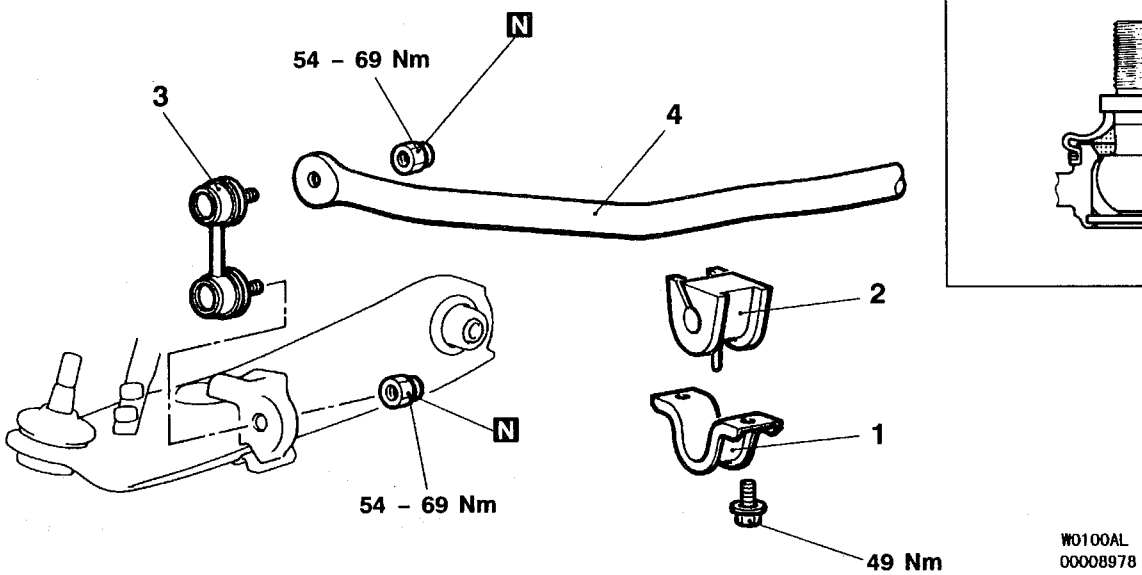

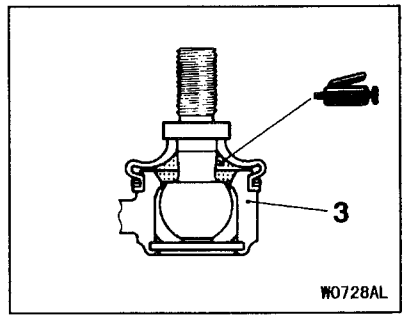

Removal steps

▶A◀ 1. Fixture
▶A◀ 2. Bushing
▶B◀ 3. Stabilizer link
▶A◀ 4. Stabilizer bar

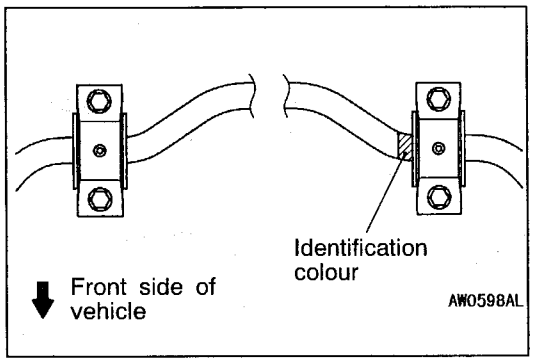

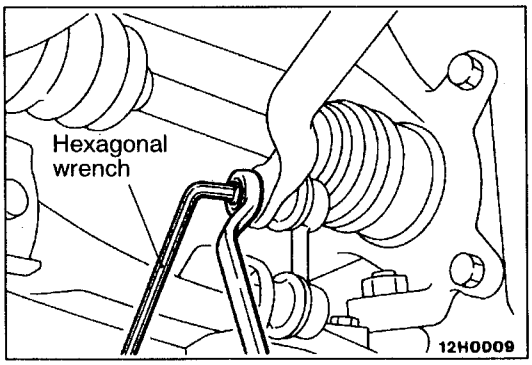

INSTALLATION SERVICE POINTS

▶A◀ STABILIZER BAR/BUSHING/FIXTURE INSTALLATION

Position the stabilizer bar so that the right end of the identification colour is aligned with the left end of the bushing as shown, and tighten the stabilizer bar fixture mounting bolt.

▶B◀ STABILIZER LINK INSTALLATION

Use a hexagonal wrench to hold the stabilizer link stud so that it will not turn, and then tighten the nut.

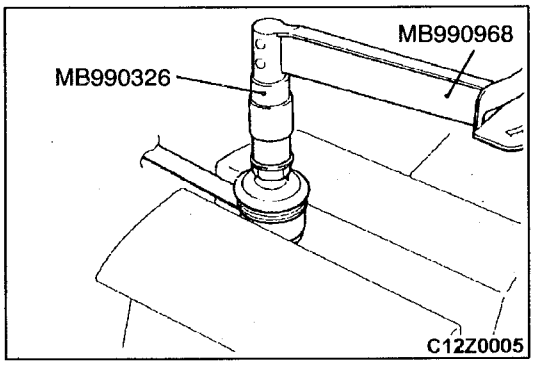

INSPECTION

STABILIZER LINK BALL JOINT TURNING TORQUE CHECK

1. After shaking the ball joint stud several times, install the nut to the stud and use the special tools to measure the turning torque of the ball joint.

   Standard value: 1.7 – 3.1 Nm

2. When the measured value exceeds the standard value, replace the stabilizer link.
3. When the measured value is lower than the standard value, check that the ball joint turns smoothly without excessive play. If so, it is possible to reuse that ball joint.

STABILIZER LINK BALL JOINT DUST COVER CHECK

1. Check the dust cover for cracks or damage by pushing it with finger.
2. If the dust cover is cracked or damaged, replace the stabilizer link.

   NOTE
   Cracks or damage of the dust cover may cause damage of the ball joint. When it is damaged during service work, replace the dust cover.

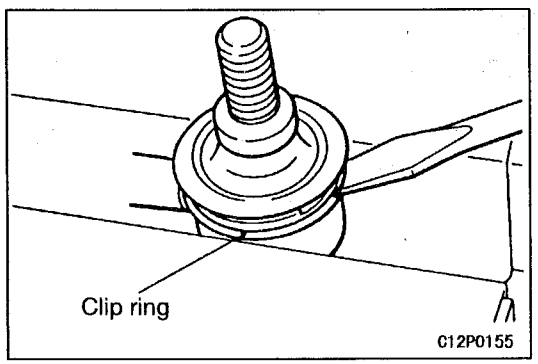

STABILIZER LINK BALL JOINT DUST COVER REPLACEMENT

Only when the dust cover is damaged accidentally during service work, replace the dust cover as follows:

1. Remove the clip ring and the dust cover.
2. Apply multipurpose grease to the inside of the dust cover.
3. Wrap plastic tape around the stabilizer link stud, and then install the dust cover to the stabilizer link.
4. Secure the dust cover by the clip ring.
5. Check the dust cover for cracks or damage by pushing it with finger.

CROSSMEMBER

REMOVAL AND INSTALLATION

Caution

***: To prevent bushings from breakage, the parts indicated by * should be temporarily tightened, and then fully tightened with the vehicle on the ground in the unladen condition.**

Pre-removal and Post-installation Operation

- Steering Gear Box and Linkage Removal and Installation (Refer to GROUP 37A.)
- Strut Bar and Lower Arm Disconnection (Refer to P.33A-10.)
- Stabilizer Bar Removal and Installation(Refer to P.33A-13.)
- Front Differential Mounting Bracket Removal and Installation (Refer to GROUP 26 – Differential Carrier.)

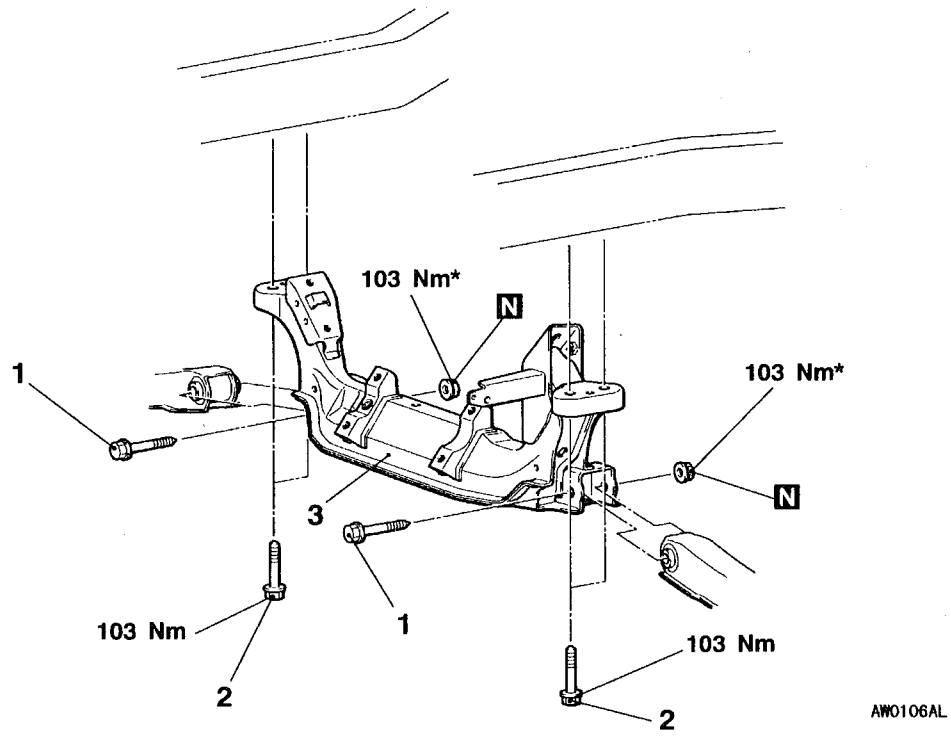

Removal steps

◀A▶ • Engine assembly holding
1. Lower arm installation bolts
2. Crossmember installation bolts
3. Crossmember

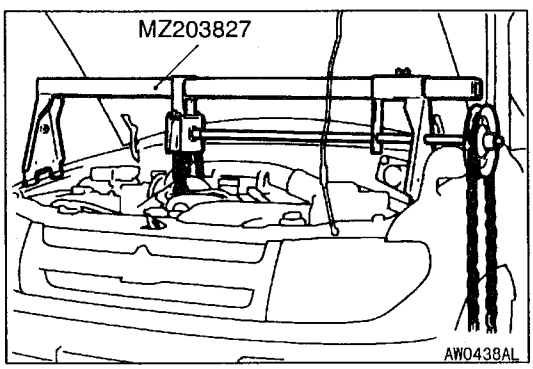

REMOVAL SERVICE POINT

◀A▶ ENGINE ASSEMBLY HOLDING

Use the general service tool to lift the engine assembly until the engine weight will not be applied to the engine mount insulators.

NOTES